PHOENIX

TECHNICAL MARKETING

Powertrain Automotive Catalog

nexperia 5 YEARS

Powertrain

While much of the focus is on battery powered systems, the traditional Internal Combustion Engine (ICE) continues to play a major role particularly with plug-in hybrid electric vehicles (PHEV). More advanced engine control and fuel management helps create efficient air-fuel mix regardless of the running conditions of the vehicle. So, while traditional powertrains remain a key part of automotive designs, ensuring these systems are as efficient and clean as possible is vital.

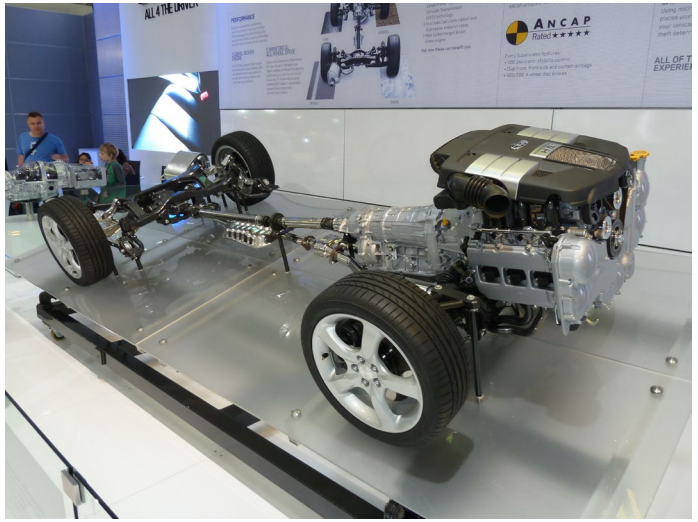

Powertrain Applications

- **Electronic Fuel Injection**
- One result of the continuing pressure for ever more fuel-efficient vehicles is a greater use of direct electronic fuel in...
- Read more
- **Cooling Fan**
- Thermal energy flows in and around a vehicle are vital and the role of the cooling fans even in hybrid and battery driven...
- Read more
- **In-Vehicle Network (CAN FD / LIN / FlexRay / Ethernet) protection**
- The car is an extremely interconnected system, with over 100 ECUs all attempting to communicate with other systems in the...
- Read more

Powertrain Focus Products

- Automotive Asfets for Repetitive Avalanche
- Automotive Schottky Diodes and Rectifiers
- Automotive Transient Voltage Suppressors
- CAN-FD ESD protection

Electronic Fuel Injection

One result of the continuing pressure for ever more fuel-efficient vehicles is a greater use of direct electronic fuel injection (EFI) systems. These injector/valve controller systems help ensure the most efficient air-fuel mix within both diesel and gasoline engines regardless of the running conditions of the vehicle. By connecting the fuel injectors to the engine control unit and various sensors, including exhaust gas temperature (EGT), ensure the appropriate and precise spraying of the atomized fuel.

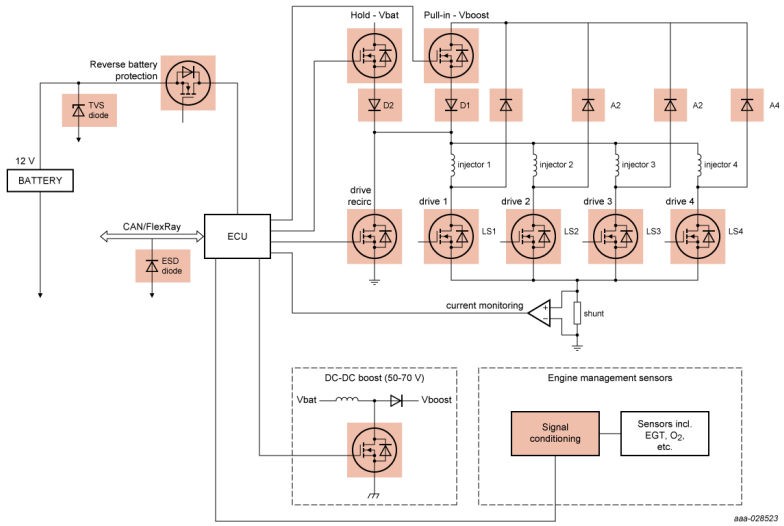

Products - Injector bank

- Pull-in transistor: MOSFET, 100 V, RDSon 23 -43 mOhm, LFPAK
- Hold current transistor: MOSFET, 100 V, LFPAK
- Cylinder select transistor: MOSFET, 100 V, LFPAK
- Cylinder select transistor: 60 V, Automotive ASFETs for Repetitive Avalanche
- Freewheeling: Schottky rectifier, CFP package, 30 A, 60 - 100 V
- Avalanche: PN rectifiers ≥ 1 A, 200 – 400 V

Products - Boost, battery, ESD

- DC-DC boost low side switch: MOSFET, 100 V, LFPAK
- DC-DC freewheeling: Schottky rectifier, 60 – 100 V
- ESD: CAN / LIN bus protection
- Reverse battery: LFPAK56, 40 V, > 100 A

Design considerations

- Controlling coil current is the key to injector fuel accuracy, with ‘pull-in’ requiring large currents while less current is needed to ‘hold’
- N-channel MOSFETs for switch pull-in, hold current and cylinder select need high current transient robustness
- Schottky rectifier or PN rectifier for freewheeling and protection of inductive load
- Ensure adequate suppression and filtering of EMI noise
- Using 100 V, ultra-low-leakage Schottky technology helps prevent thermal runaway

Cooling Fan

Thermal energy flows in and around a vehicle are vital and the role of the cooling fans even in hybrid and battery driven vehicles is critical. This helps maintain the optimal temperature range while lowering fuel consumption and emissions. These cooling fans tend to be high power systems often operating up to 1.2 kW

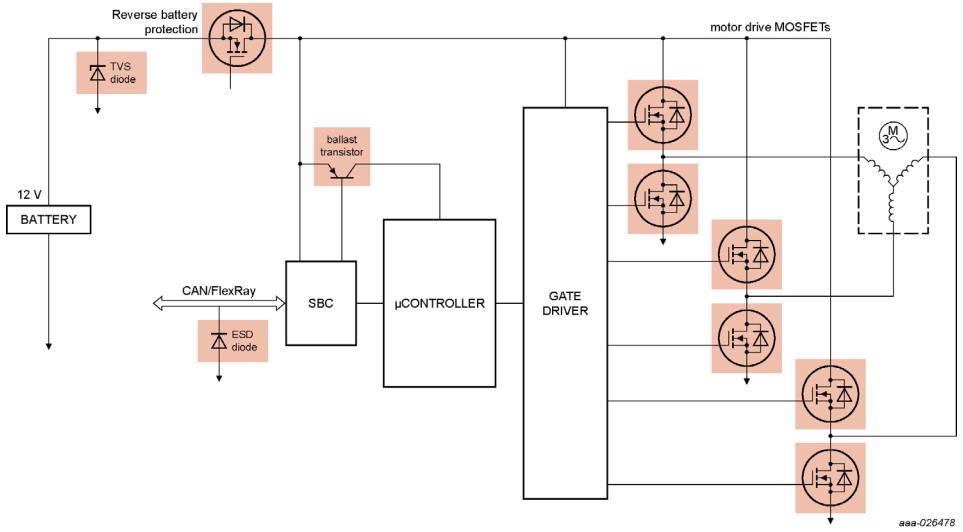

Products

- Motor drive MOSFETs: 40 V, < 15 mOhm, LFPAK33 / LFPAK56(D)
- Schottky rectifiers: 100 V
- ESD: CAN / LIN bus protection
- ESD: TVS, 24 / 40 W
- Reverse battery: LFPAK56, 40 V, > 100 A

Design considerations

1.2 kW Brushless DC motor drive

- LDC preferred for controllability and low power performance

Controlled by 6 MOSFETs operated with PWM

- puts the focus on switching losses and EMC performance
- power saving of 100 W on average
- emission reduction of approx. 0.24 kg CO2 per 100 km.

In-Vehicle Network (CAN FD / LIN / FlexRay / Ethernet) protection

The car is an extremely interconnected system, with over 100 ECUs all attempting to communicate with other systems in the car. To manage increased complexity and higher data rates as new versions of existing protocols find their way into vehicle networks (CAN FD, Ethernet), the classic flat wiring harness architecture is changing to a domain and zonal architecture with Automotive Ethernet as the backbone. Offering increased system robustness, our IVN bus line protection solutions are well suited to automotive bus protection without impeding signal integrity in this electrically noisy environment.

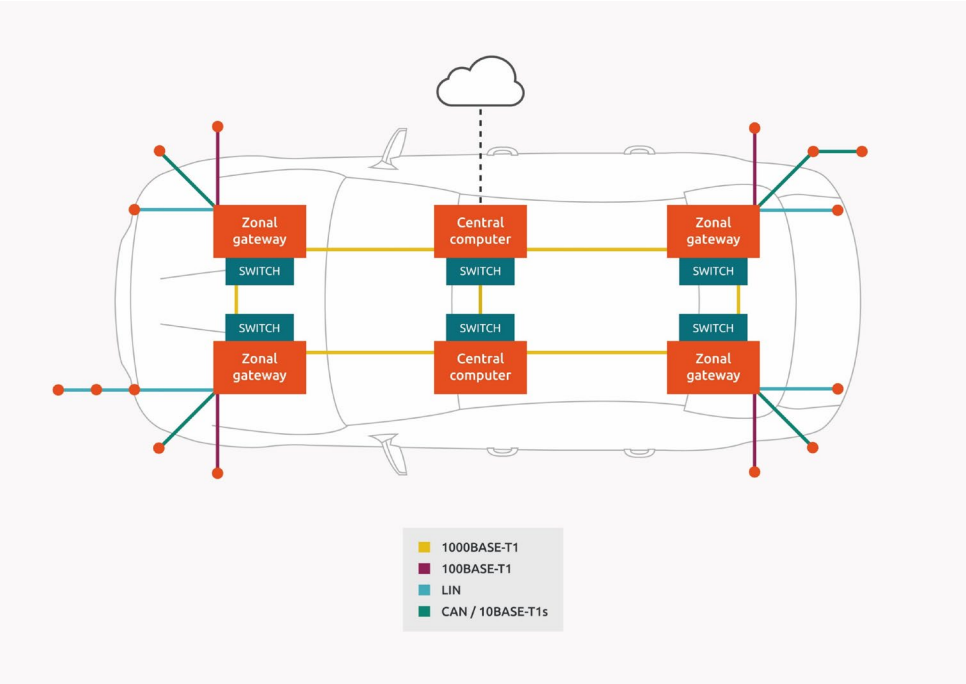

Products

- LIN / CAN(FD) / FlexRay
- Automotive ESD Ethernet

Design considerations

- High ESD robustness up to 30 kV and high surge currents up to 3.5 A (8/20µs)
- Excellent ESD clamping behavior
- Operate at a low capacitance avoiding any unwanted circuit disturbances
- Asymmetrical internal diode configuration, ensures optimized electromagnetic immunity