PHOENIX

TECHNICAL MARKETING

Automotive Catalog

nexperia 5 YEARS

Airbag controller with Safing MOSFET

Airbags have been a standard feature in passenger cars for over 20 years. Naturally these systems need to be extremely robust and reliable, regardless of whether it is just a single airbag for the driver and front passenger or a complete multi-stage airbag system offering a range of protection options (front, side, head, rollover and even pedestrian protection). A Safing MOSFET in series with firing circuit transistors provides cost-effective operational reliability, enabling breakage of the current circuit in case of incorrect operation due to malfunction or electrical noise.

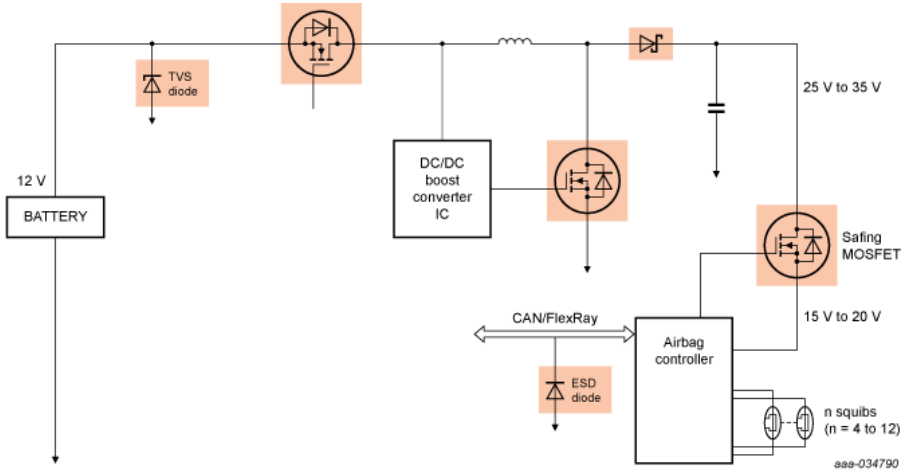

Products

- Safing MOSFET: ASFETs for Airbags, LFPAK33 / 56
- DC-DC boost low side switch: MOSFET, 60 V, LFPAK33
- DC-DC freewheeling: Schottky rectifier, 60 – 100 V, CFP
- ESD: CAN / LIN bus protection
- ESD: TVS, 400 W / 600 W
- Reverse battery protection: MOSFET, 40 V, LFPAK33/56

Design considerations

- Traditional solutions to Airbag applications are being withdrawn from the market due to unsustainability
- Enhanced SOA technology provides similar linear mode performance in a sustainable silicon technology
- For pulsed linear mode applications, such as the Safing MOSFET in airbags, Nexperia's ASFETs provide the required robustness while delivering significant board space savings (up to 84% with an LFPAK33 device) compared to traditional DPAK solutions
- Airbag firing circuits need a stable voltage of 15 to 20 V, requiring a boost converter to step up the standard 12 V battery voltage to 25–35 V

Anti-locking braking systems

Anti-locking braking systems help vehicles maintain contact with the road surface and prevent skidding in conditions such as icy or wet roads. When the driver applies braking the ABS responds, many times every second, to changes in the rotational speed of each wheel. Reducing or increasing brake pressure as necessary to maintain control. From a safety perspective, critical systems are increasingly moving to dual-redundancy designs.

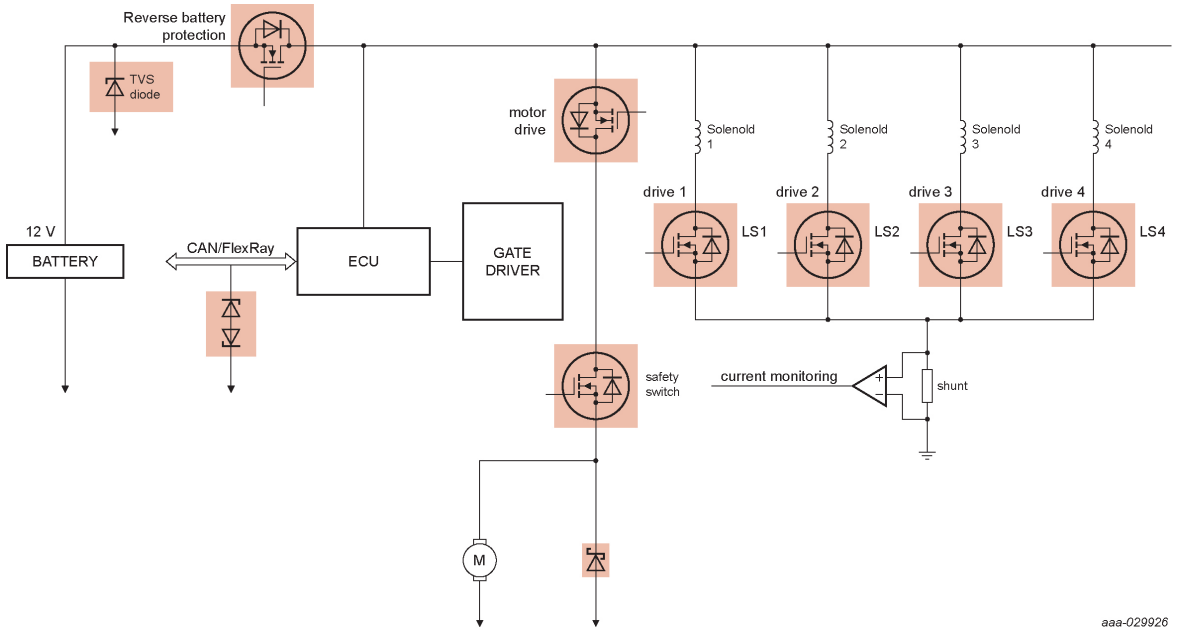

Products

- Motor drive MOSFET: 40 V, LFPAK88
- Safety switch MOSFET: 40 V, LFPAK88
- Solenoid drive MOSFET: 40 V, LFPAK56
- Solenoid drive MOSFET: 60 V, Automotive ASFETs for Repetitive Avalanche
- Schottky rectifiers: 100 V
- ESD: CAN / Flexray bus protection
- ESD: TVS, 24 / 40 W
- Reverse battery: 40 V, LFPAK88

Design considerations

- To improve solenoid drop out time the body diode is avalanched, hence the MOSFET must be avalanche rugged
- The safety switch MOSFET is normally continuously ON
- Protect against EMI noise by ensuring sufficient suppression and filtering

Automatic HVAC - BLDC blower motor

In Heating, Ventilation, and Air Conditioning (HVAC) systems, the trend is towards temperature control with PWM driven brushless DC motors. Overall system reliability and efficiency is improved compared with linear operation and brushed motors. This delivers significant performance, fuel and CO2 savings over the lifetime of the vehicle.

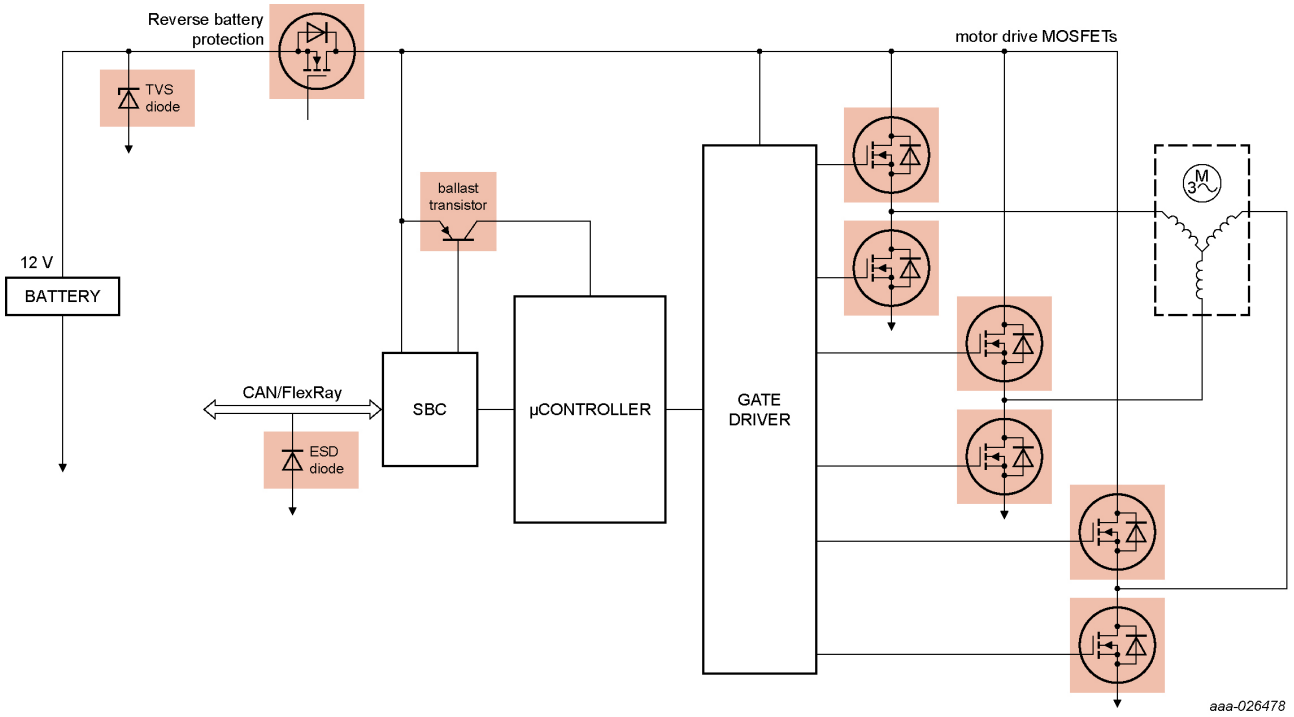

Products

- Motor drive MOSFETs: 40 V, LFPAK
- Schottky rectifiers: 100 V
- Reverse battery: LFPAK56, 40 V, > 100 A
- ESD: CAN / LIN bus protection
- ESD: TVS, 24 / 40 W

Design considerations

50 W – 400 W Brushless DC motor drive

- BLDC preferred for controllability and low power performance

Controlled by 6 MOSFETs operated with PWM

- puts the focus on switching losses and EMC performance
- power saving of 100 W on average
- emission reduction of approx. 0.24 kg CO2 per 100 km.

Applications face a high ambient temperature

Cooling Fan

Thermal energy flows in and around a vehicle are vital and the role of the cooling fans even in hybrid and battery driven vehicles is critical. This helps maintain the optimal temperature range while lowering fuel consumption and emissions. These cooling fans tend to be high power systems often operating up to 1.2 kW

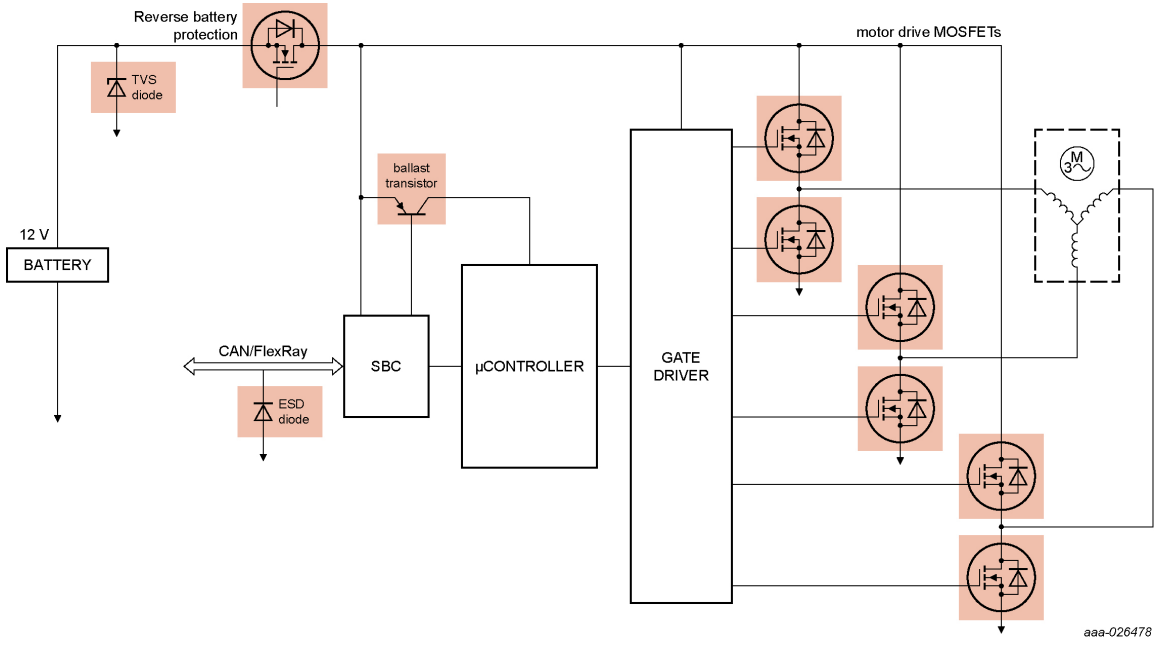

Products

- Motor drive MOSFETs: 40 V, < 15 mOhm, LFPAK33 / LFPAK56(D)
- Schottky rectifiers: 100 V
- ESD: CAN / LIN bus protection
- ESD: TVS, 24 / 40 W
- Reverse battery: LFPAK56, 40 V, > 100 A

Design considerations

1.2 kW Brushless DC motor drive

- LDC preferred for controllability and low power performance

Controlled by 6 MOSFETs operated with PWM

- puts the focus on switching losses and EMC performance
- power saving of 100 W on average
- emission reduction of approx. 0.24 kg CO_2 per 100 km.

48 V Battery Management System (BMS)

48 V batteries tend to be created using Li-ion multi-cell battery packs suing 8-16 cells. From a safety perspective, but also to ensure the best efficiency and longest battery life these battery packs need to be carefully monitored and controlled. This requires accurate voltage, temperature and current as well as battery state of charge (SoC) and state of health (SoH) monitoring. In addition for most efficient battery use, good cell balancing and battery optimization is a must.

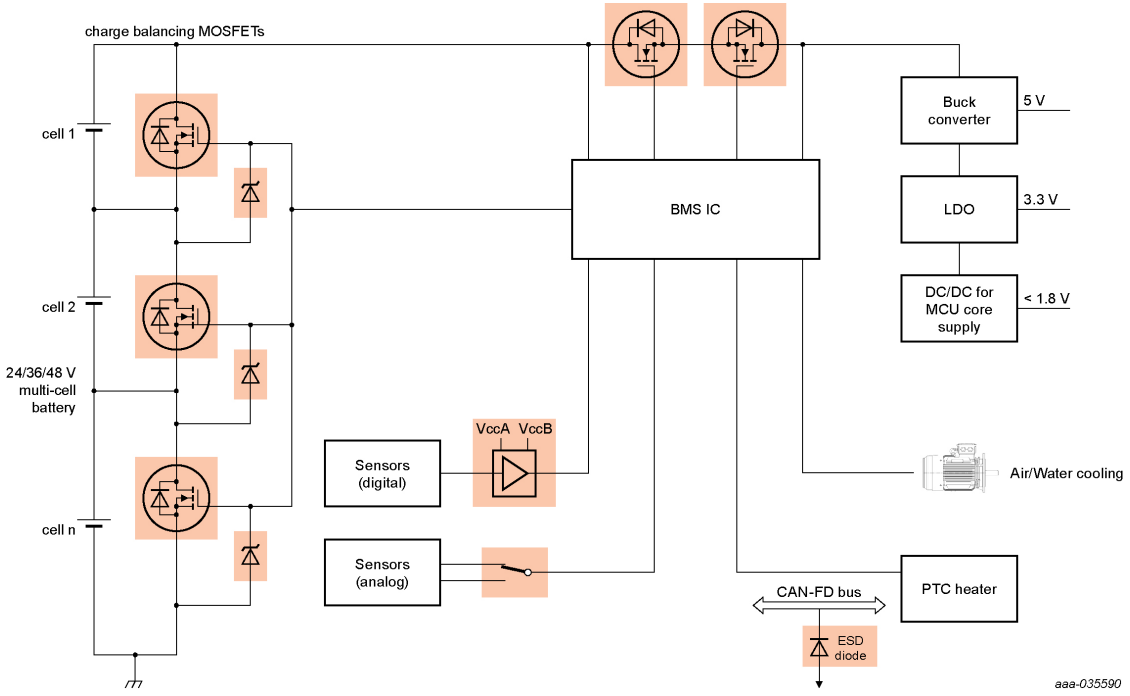

Products - Cell balancing

- Charge balancing MOSFETs: 40 V, RDSon < 5 mOhm
- Battery protection MOSFETs: 40-100 V; < 5 mOhm
- ESD: TVS diodes 400-600 W
- Zener diodes: SOT23 / SOD32(F) / SOD123(F)

Products - e-fuse / regulation

- efuse MOSFET: 30-60 V, P-channel
- Linear pre-regulation: Bipolar transistor, NPN, 100 V, 3 A

Products - HMI / MMI

- ESD: CAN / CAN-FD bus protection
- Autosense translators: NXB / NXS families
- Control logic: LVC family
- Analog switch: LV/LVC family

Products - related

- DC/DC conversion for MCU core supply

ADAS radar sensor module

In the last few years the innovation in Advanced Driver Assistance System (ADAS) radar sensor modules has been massive. We now have options for long, medium, short and ultra-short range sensing along with different radar frequencies and LIDAR. For full and advanced system warnings all these solutions are needed, with multiple sensors for each option multiplexed together for complete 360 degree coverage.

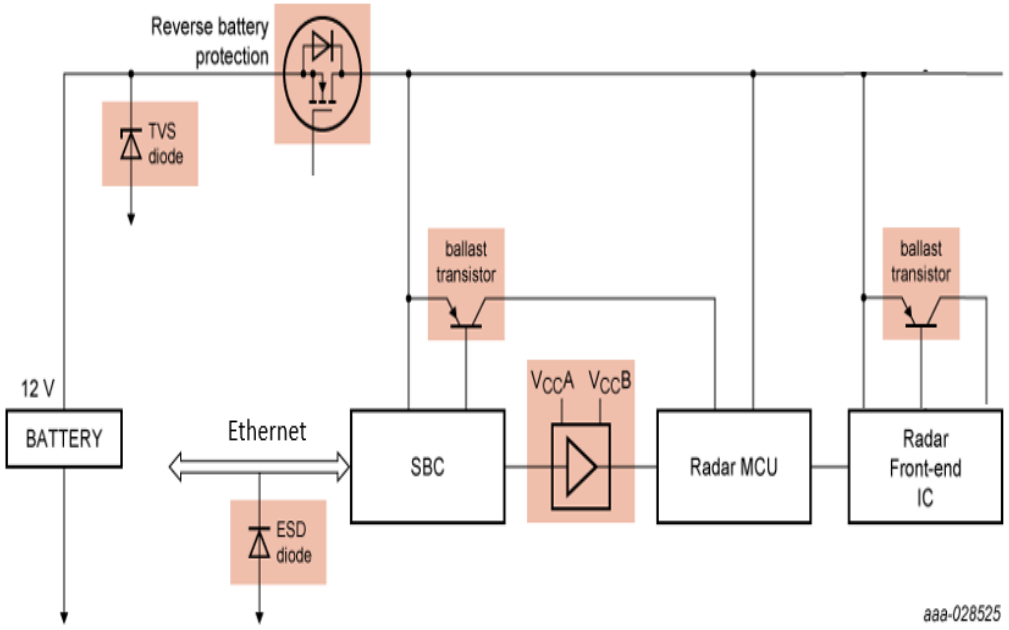

Products

- Reverse battery: LFPAK56(E) / LFPAK88, 40 V, > 100 A
- Ballast transistor: Low VCEsat transistors, ≤ 100 V
- ESD: Ethernet (100Mb / 1Gb) bus protection
- ESD: TVS, 400 W / 600 W
- Dual supply voltage translation: AVC, LVC
- MUX input: single-pole switches

Design considerations

- With various radar options and multiple sensors needed for full 360 degree sensing space is extremely limited
- Move to ‘postage stamp’ radar sensor modules to save overall system space
- Move to CFP and LFPAK packages for space saving, thermal efficiency and system robustness

Constant current source for interior LED lighting

Highly efficient and compact, LEDs have become the de-facto choice for interior lighting applications, from cluster backlighting to mood lighting. However, LEDs are sensitive to operating current so, for any single or string system, a constant steady state current is vital. That's why constant current source devices make the ideal solution for driving LEDs in the electrically noisy environment of vehicles. Our space-saving NCR series complements the efficiency of LEDs perfectly with accurate and stable outputs.

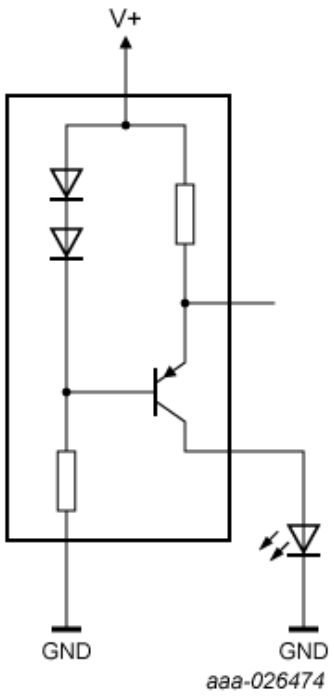

Products

- Constant current source: NCR series

Design considerations

- Individually dimmable LED control
- Accurate LED current control
- Compact package (SOT23 / SOT457)
- High efficiency driver design
- Low EMI solution using small scale highly integrated package technology
- Maximum drain current: 10 to 50 mA

High power, high efficiency DC/DC converter

By using a high efficiency boost circuit this 12 V to 80 V converter design delivers high power while saving energy.

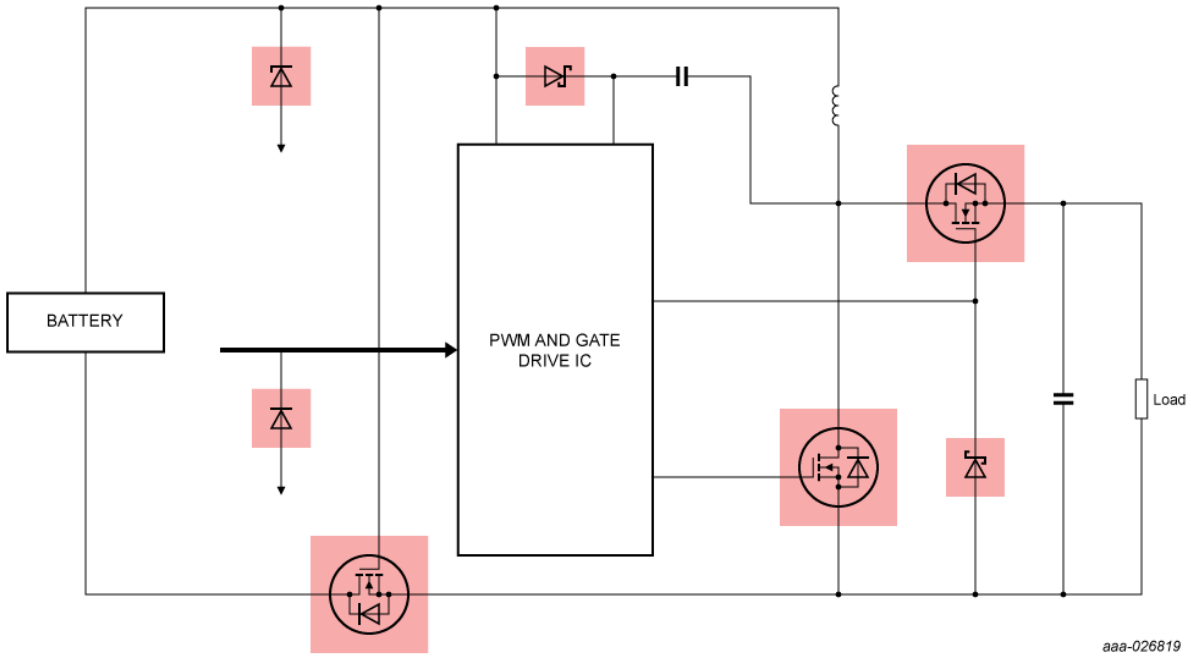

Products

- MOSFETs: 30 V, LFPAK56, LFPAK33
- Schottky diodes: ≤ 250 mA, SOD523 / DFN1006-2
- Reverse battery: LFPAK56(E) / LFPAK88, 40 V, > 100 A

Design considerations

- Point of load non-isolated DC.DC
- Synchronous topology
- Uses a dedicated Schottky rather than rely on the body diode of the MOSFET to ensure high efficiency performance

Electronic Fuel Injection

One result of the continuing pressure for ever more fuel-efficient vehicles is a greater use of direct electronic fuel injection (EFI) systems. These injector/valve controller systems help ensure the most efficient air-fuel mix within both diesel and gasoline engines regardless of the running conditions of the vehicle. By connecting the fuel injectors to the engine control unit and various sensors, including exhaust gas temperature (EGT), ensure the appropriate and precise spraying of the atomized fuel.

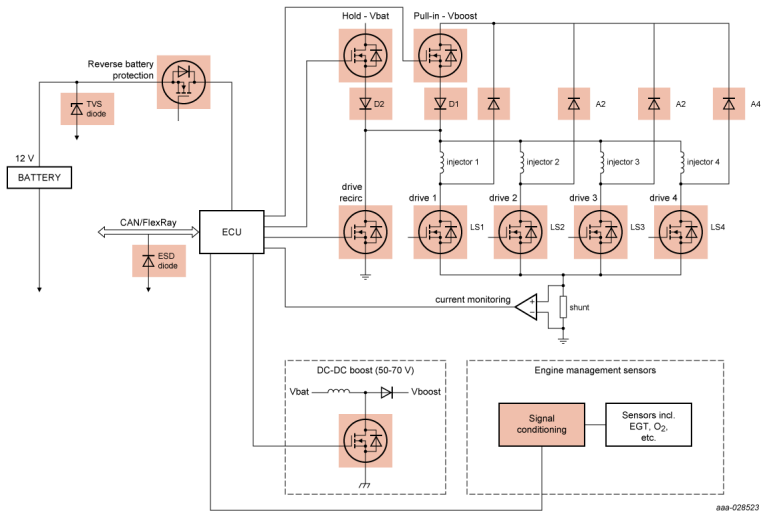

Products - Injector bank

- Pull-in transistor: MOSFET, 100 V, RDSon 23 -43 mOhm, LFPAK
- Hold current transistor: MOSFET, 100 V, LFPAK
- Cylinder select transistor: MOSFET, 100 V, LFPAK
- Cylinder select transistor: 60 V, Automotive ASFETs for Repetitive Avalanche
- Freewheeling: Schottky rectifier, CFP package, 30 A, 60 - 100 V
- Avalanche: PN rectifiers ≥ 1 A, 200 – 400 V

Products - Boost, battery, ESD

- DC-DC boost low side switch: MOSFET, 100 V, LFPAK
- DC-DC freewheeling: Schottky rectifier, 60 – 100 V
- ESD: CAN / LIN bus protection
- Reverse battery: LFPAK56, 40 V, > 100 A

Design considerations

- Controlling coil current is the key to injector fuel accuracy, with ‘pull-in’ requiring large currents while less current is needed to ‘hold’
- N-channel MOSFETs for switch pull-in, hold current and cylinder select need high current transient robustness
- Schottky rectifier or PN rectifier for freewheeling and protection of inductive load
- Ensure adequate suppression and filtering of EMI noise
- Using 100 V, ultra-low-leakage Schottky technology helps prevent thermal runaway

Electronic Power Steering

By magnifying driving wheel movement, electric power steering (EPS) systems make steering easier. Additional torque is provided by brushless DC motors due to their compact size and relatively low system cost, with increasing safety requirements driving the introduction of dual-redundancy systems. Brushless DC motors also provide improved performance, longer lifetimes, reduced noise, increased reliability and ease of installation.

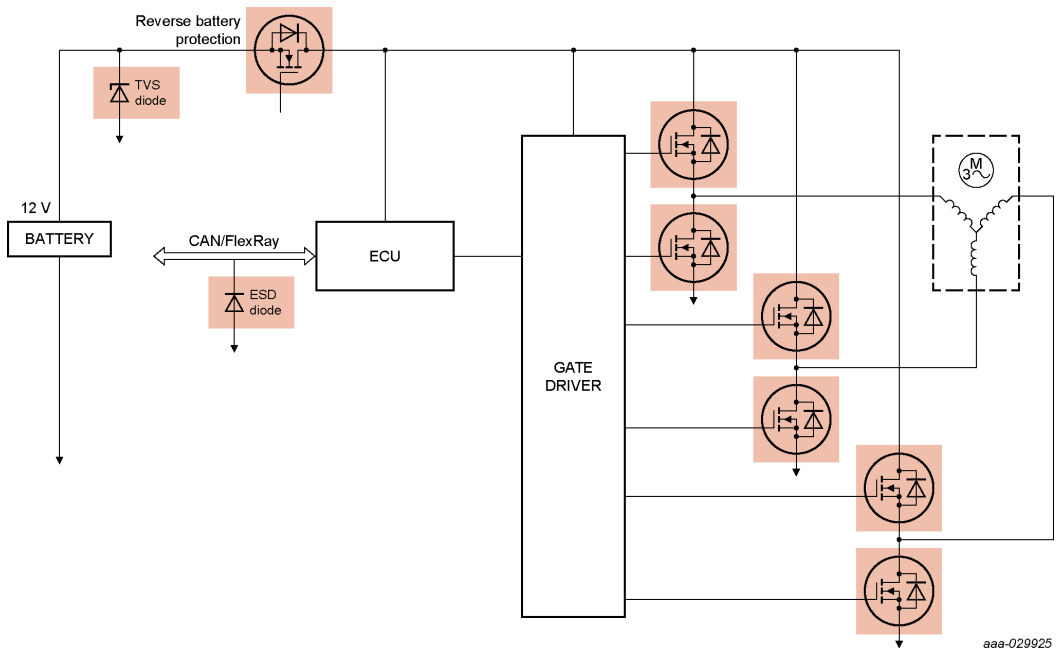

Products

- Motor drive MOSFETs: 40 V, LFPAK88
- Schottky rectifiers: 100 V
- ESD: CAN / Flexray bus protection
- ESD: TVS, 24 / 40 W
- Reverse battery: 40 V, LFPAK88

Design considerations

- Dual-redundancy designs require greater power densities and space saving, enabled by LFPAK88
- System must be able to handle worst-case current and thermal surges caused by torque assistant pulses
- Protect against EMI noise by ensuring sufficient suppression and filtering

High-voltage traction inverter

With both battery electric vehicles (BEV) or plug-in hybrid electric vehicles (PHEV), transferring the stored energy from the high-voltage (400 / 800 V) battery to the electric motors used to drive the wheels is the job of the high-voltage traction inverter. Traction inverters currently come in all shapes and sizes, ranging from 50 kW up to more than 500 kW with currents of several hundred amps. So safe and efficient DC to AC conversion is critical. In addition a small efficient traction inverter using GaN FETs can help eliminate the high-frequency whine associated with many battery powered vehicles.

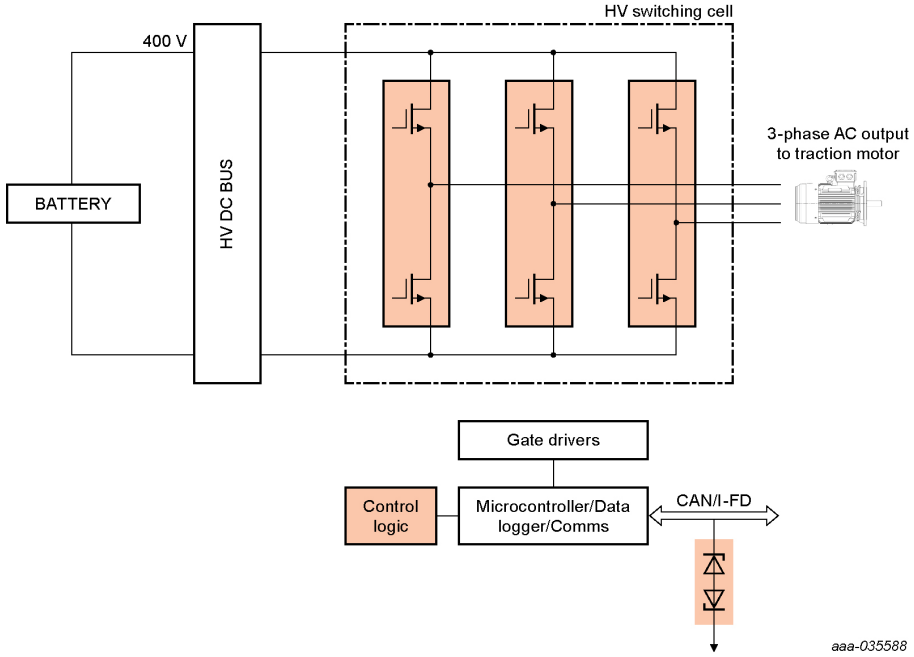

Products

- GaN FETs: 650 V, CCPAK1212
- ESD: CAN-FD
- Control logic: LVC / HC family

Design considerations

- Dual electric motor architecture is more economical than one electric motor and a mechanical differential
- In premium BEVs trend is to have separate inverters – one for each axle or one for each electric motor
- To maximise range, inverters need to be extremely efficient yet at the same time be as small as possible, often with multiple dies per switch (4 – 8) and multiple switches per inverter cell
- Using GaN FETs eliminates the need for a separate body diode in the inverter switches.

In-Vehicle Network (CAN FD / LIN / FlexRay / Ethernet) protection

The car is an extremely interconnected system, with over 100 ECUs all attempting to communicate with other systems in the car. To manage increased complexity and higher data rates as new versions of existing protocols find their way into vehicle networks (CAN FD, Ethernet), the classic flat wiring harness architecture is changing to a domain and zonal architecture with Automotive Ethernet as the backbone. Offering increased system robustness, our IVN bus line protection solutions are well suited to automotive bus protection without impeding signal integrity in this electrically noisy environment.

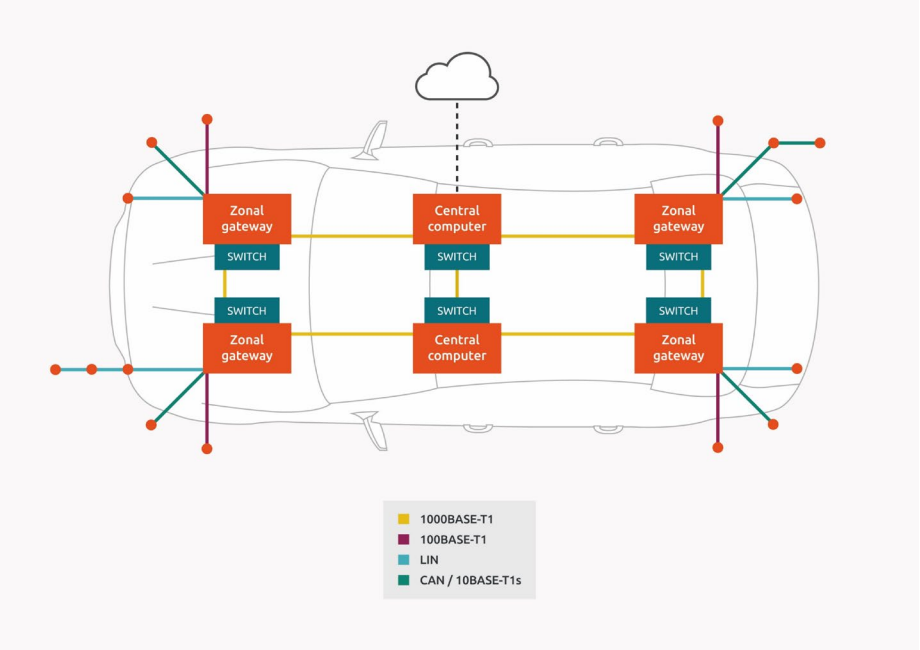

Products

- LIN / CAN(FD) / FlexRay
- Automotive ESD Ethernet

Design considerations

- High ESD robustness up to 30 kV and high surge currents up to 3.5 A (8/20µs)
- Excellent ESD clamping behavior
- Operate at a low capacitance avoiding any unwanted circuit disturbances
- Asymmetrical internal diode configuration, ensures optimized electromagnetic immunity

Inverter for aux. and e-compressor

An internal combustion engine provides more than just traction power to the wheels, it also powers auxiliary loads such as compressors and pumps for brakes, suspension, heating and coolants. In battery or hybrid vehicles these auxiliaries need to powered independently. Applications including cabin cooling & heating, battery thermal management (fast charging and driving) and drive-train cooling require three-phase inverters typically rated from 2 kW to 10 kW. A single-phase inverter can also be used to provide an auxillary AC mains output to power various external devices.

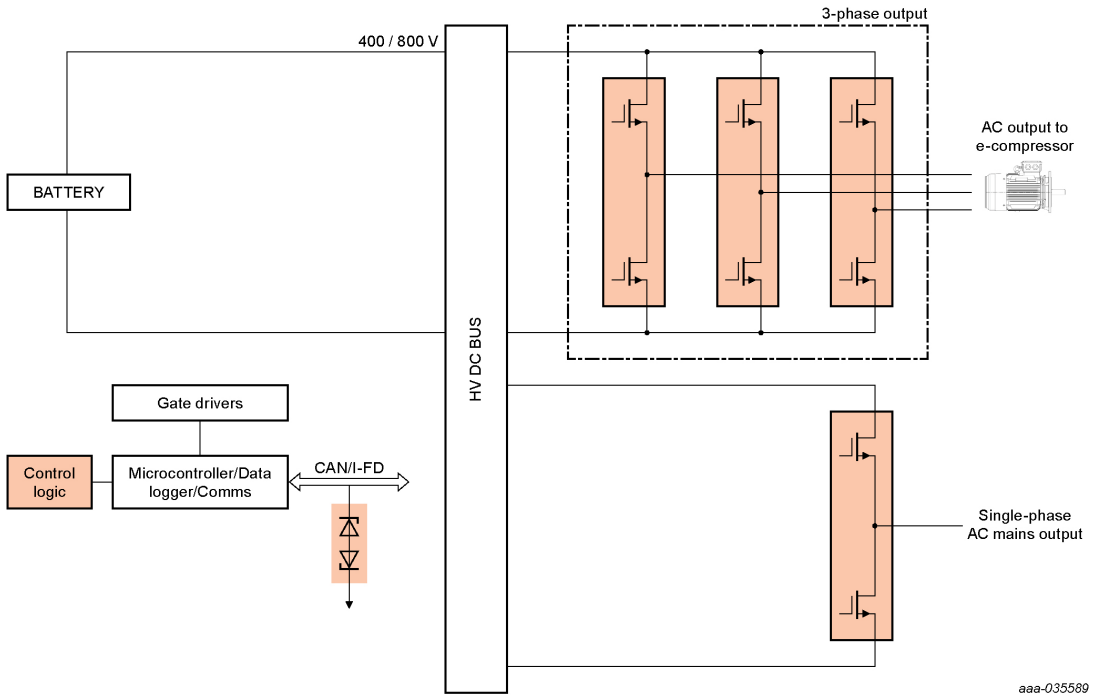

Products

- GaN FETs: 650 V, CCPAK1212
- ESD: CAN-FD
- Control logic: LVC / HC gates

Design considerations

- To maximise range, inverters need to be extremely efficient yet at the same time be as small as possible, often with multiple dies per switch (4 – 8) and multiple switches per inverter cell
- Using GaN FETs eliminates the need for a separate body diode in the inverter switches.
- AC outlet - usually fixed frequency and voltage amplitude, passive filter required for high signal fidelity and low distortion (low THD)

LED backlight for touchscreens and cameras

Look in any new car today and you'll see traditional dashboard and central consoles being replaced by LCD displays and infotainment touchscreens. Soon we may have screens for front and rear passengers and with all the various camera, rear view mirrors could easily switch to an internal display. In fact some analysts believe the average car will have up to 20 cameras and 15 displays by 2030. Of course one issue with LCD displays is the need for good backlighting. That is where a proven step-up DC/DC conversion is vital.

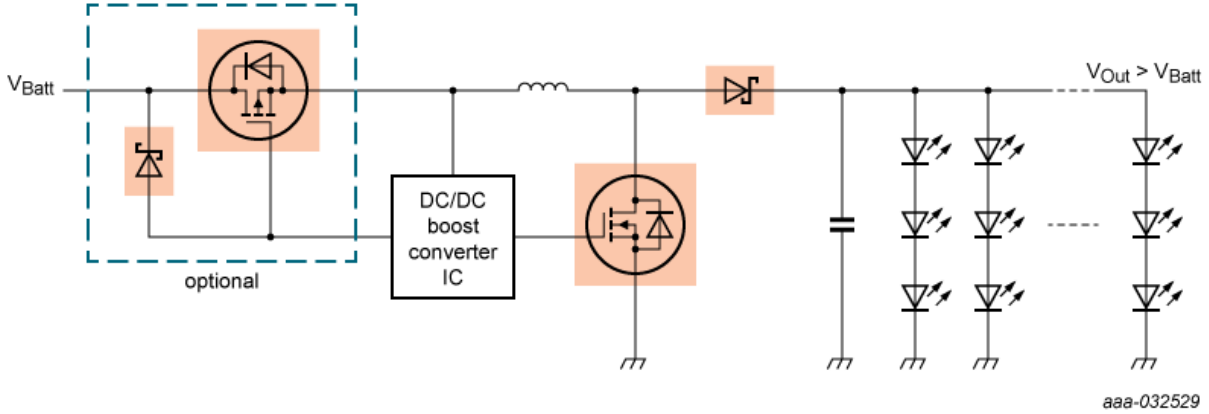

Products

- Boost MOSFET: N-channel, 40 / 80 V, Rdson 3 - 23 mOhm, LFPAK33/56
- Freewheeling Schottky diode: 60-100 V, low VF; CFP3/5/15
- Protection MOSFET: 30-60 V, Rdson 10 - 50 mOhm, LFPAK56
- Schottky diode: 20-100 V, DFN package

Design considerations

- Boost MOSFET must offer a high efficiency and very good thermal behavior
- Low VF delivers required efficiency, and Trench types can offer increased thermal stability
- Range of products and package sizes needed to allow for different LED string lenghts and numbers, and best EMI performance

Adaptive Front LED lights

Front LED lighting is the most power-hungry lighting application and often has a high degree of complexity. A multi-channel boost/buck topology is often preferred as this provides flexibility for the LED drive. The output LEDs can be dimmed by using a combination of low-power bipolar transistors with a shift register.

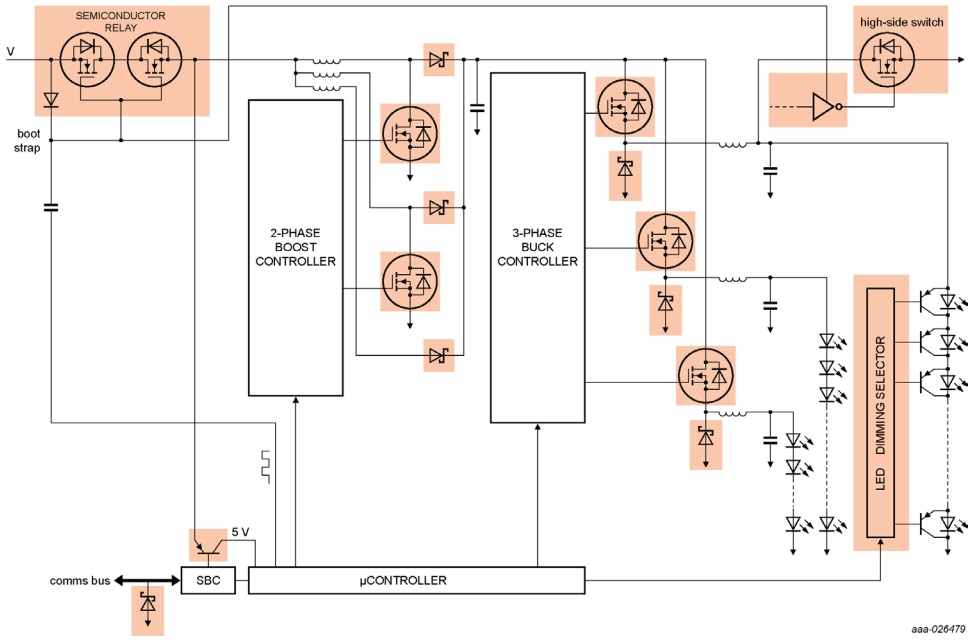

Products

- Driver MOSFETs - 80 V, 25 mOhm, LFPAK56
- ESD diode - CAN / LIN bus protection
- Schottky rectifiers - 60 V; 2-10 A
- High-side switch - 80 V, DFN2020
- Shift register - HC(T), DHVQFN16
- Reverse battery: LFPAK56, 40 V, > 100 A

Design considerations

- Digital controlled adaptive non-glare
- Individually dimmable LED Control
- Accurate LED current control
- Compact design
- High efficiency driver design
- Low EMI solution using small scale highly integrated package technology

On-Board Charger (OBC)

Whether a car is a battery electric vehicle (BEV) or plug-in hybrid electric vehicle (PHEV), one critical component is the on-board charger (OBC). This enables the charging of the high-voltage DC battery packs from various electric vehicle service equipment (EVSE) or charging stations. Those range from single-phase Level 1 residential chargers (~3 kW) to multi-phase Level 2 commercial capable of providing up to 22 kW, supporting both 400 and 800 V batteries. Of course Level 3 fast chargers provide a DC voltage direct to the battery, bypassing the OBC. However, a small highly efficient form factor is required to give manufactures the flexibility to place the OBC in different locations in various models.

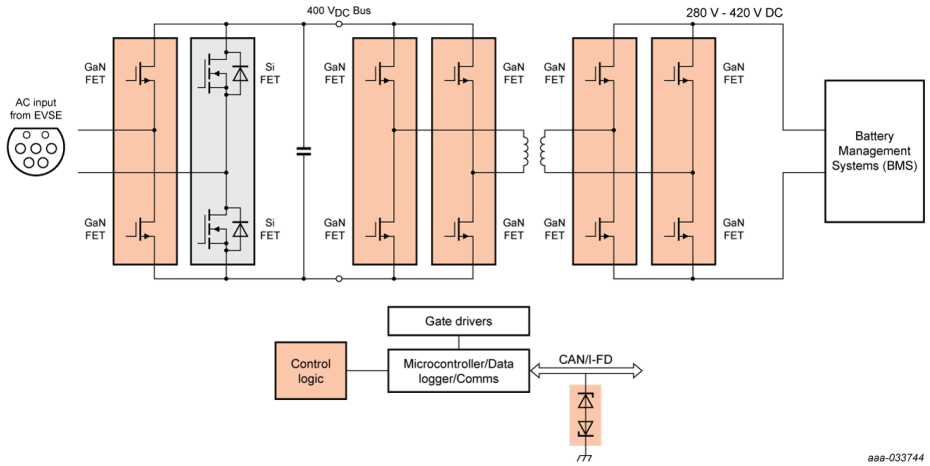

Products

- GaN FETs: 650 V, CCPAK1212
- ESD: CAN-FD
- Control logic: LVC / HC family

Design considerations

- Designers have multiple options for OBC conversion topologies, including single-phase / multi-phase and uni- / bidirectional
- Current batteries are typically 400 V, using 650 V FETs in a bidirectional OBC topology where GaN brings the highest efficiencies (for unidirectional topologies SiC diodes can be used on the secondary side
- For 800 V batteries, need to go multi-level GaN or high-voltage SiC
- However OBC topologies are heavily fragmented which may lead to combined 650 / 1200 V device solutions
- PFC output defines blocking voltage of power semiconductors at DC-DC-Input and battery voltage defines blocking voltage at DC-DC-Output (650 or 1200 V)
- Trend towards higher OBC charging power and 800 V batteries for higher class BEV solutions, will require more 1200 V solutions

Step-down DC/DC converter

This circuit converts 12 V from the car battery to 5 V. It can be used to drive low power units such as the dashboard cluster.

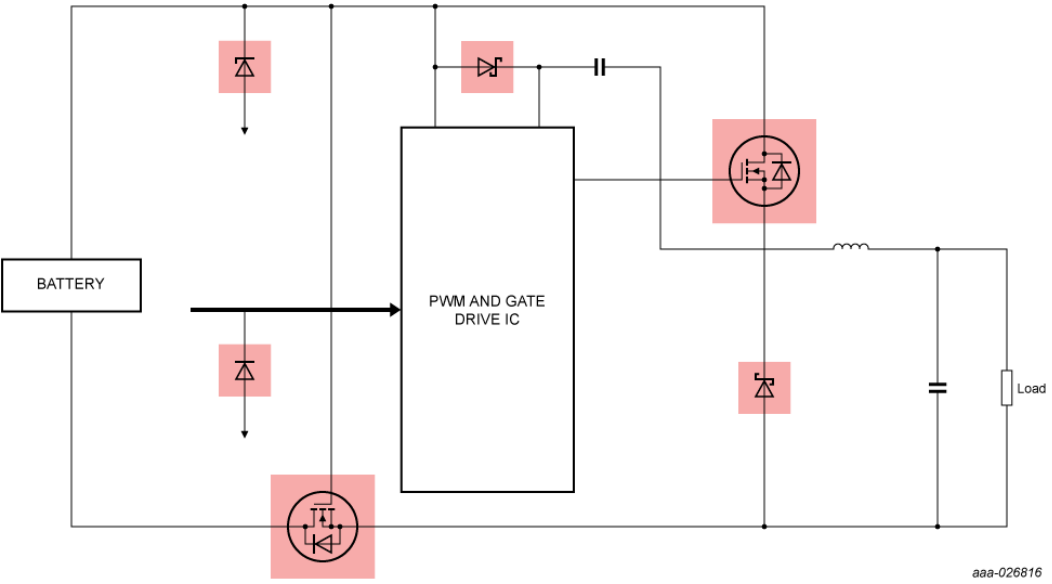

Products

- MOSFETs: 30-40 V, < 15 mOhm, LFPAK33 / LFPAK56(D)
- Schottky diodes: ≤ 250 mA, SOD523 / DFN1006-2
- Reverse battery: LFPAK56(E) / LFPAK88, 40 V, > 100 A

Design considerations

- Point of load non-isolated DC.DC
- Asynchronous buck converter circuit
- Economical, two-MOSFET design
- Standard efficiency
- Step-down of voltage while stepping up current
- Flexibility to replace MOSFET diode pair with LFPAK56D dual or LFPAK56D half-bridge MOSFET

Multimedia / infotainment bus protection

Essential for entertainment and infotainment systems, multimedia buses are a growing trend in vehicles. For these high-speed buses, which often based on consumer network standards, the challenge is to ensure they can survive the harsh automotive environment and as data rates go up so capacitance must come down. So only the best ESD protection is good enough to ensure reliable operation.

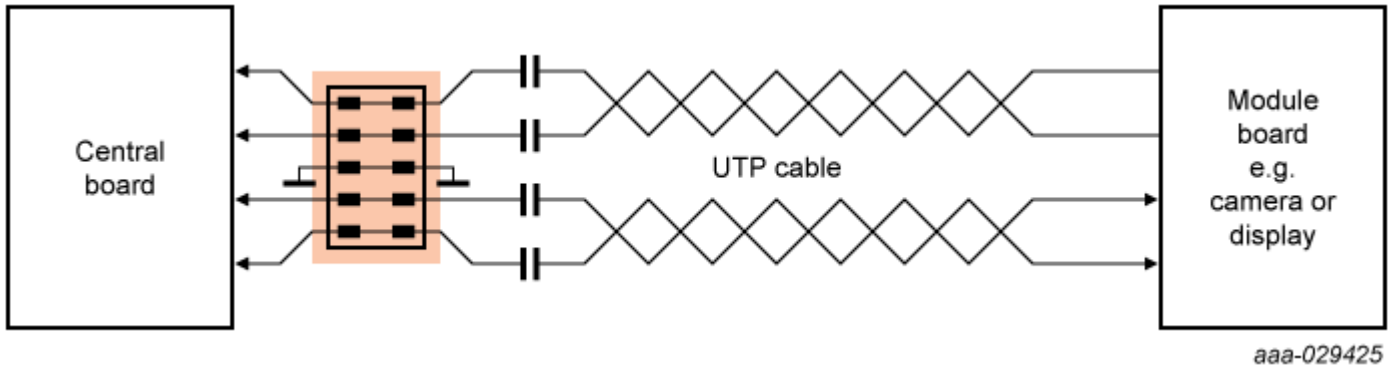

Products

•Automotive high-speed network protection

Design considerations

•High ESD robustness up to 30 kV and high surge currents up to 3.5 A (8/20µs)
•Excellent ESD clamping behavior
•Operate at a low capacitance avoiding any unwanted circuit disturbances

USB4 connectivity and compatibility

As USB Type-C connectors have become the default standard, with the USB4 specification the USB Implementers Forum (USB-IF) is delivering a single standard connection protocol. Designed to unite wired connections via USB Type-C connectors, it is offers compatibility with USB 3.2, USB 2.0, PCIe DisplayPort and Thunderbolt 3. However, ensuring effective protection of devices operating with different backward compatible protocols requires the optimised ESD protection offered by Nexperia's TrEOS protection devices for super-speed lines.

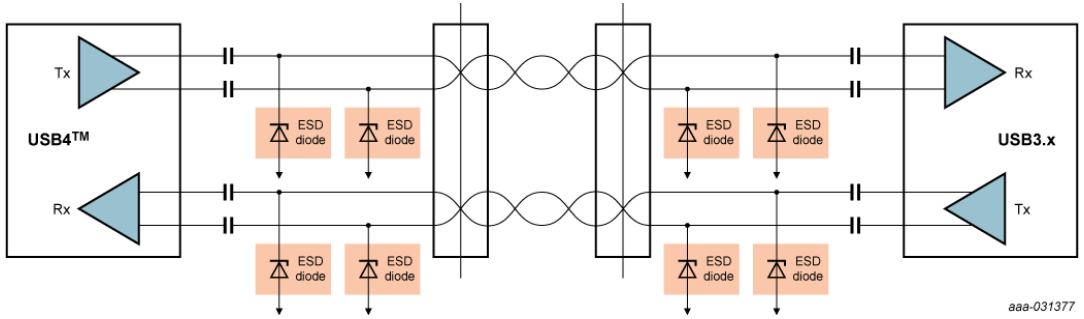

Products - ESD protection

- Position: close to port – Cd (typ) 0.1 pF; DSN0603-2
- Position: at RX inputs - PESD1V2Y1BSF

Design considerations

- 20 Gbps on one differential pair (super-speed)
- Low insertion loss (signal attenuation) and low return loss (signal reflection) required along with low clamping to protect sensitive super-speed data lines
- Need to protect AC-coupling for the receiver inputs (Rx) which are mandatory on USB4
- Different protocols have different operating voltages